ASI Asia Social Issues
ASIA SOCIAL ISSUES 2027; 20(2): 75
https://doi.org/10.48048/asi.2027.75
SPRINT Scholarly Publishing and Repository Integration Center
RESEARCH ARTICLE

The Death of Subjective Norm? Identity and Social Media as New Drivers of Sustainable Fashion Intention: An Extended TPB Study of Chinese Generation Z

Haung Shunping[1], Sakchai Naknok[2], Chanta Jhantasana[2,*]

[1]*Entrepreneurship and Innovation Design Program, Valaya Alongkron Rajabhat University under the Royal Patronage, Pathum Thani 13180, Thailand*
[2]*Faculty of Management Science, Valaya Alongkron Rajabhat University under the Royal Patronage, Pathum Thani 13180, Thailand*

([*]Corresponding author's e-mail: Chanta@vru.ac.th)

Received: 30 July 2026, Revised: 18 September 2026, Accepted: 30 September 2026, Published: 27 November 2026

Abstract

This study examines whether subjective norms (SN), a core component of the theory of planned behavior (TPB), contribute to sustainable fashion purchase intention among Chinese Generation Z consumers when identity- and social media-related factors are considered. Using survey data from 400 consumers, this study tests an extended TPB model incorporating environmental value and knowledge as distal antecedents and sustainable identity (SI) and social media engagement (SME) alongside the traditional TPB predictors. Nested PLS-SEM comparisons show that removing SN improves relative model fit without reducing the explained variance in behavioral intention (R^2 = 0.776). SN has no significant effect on intention, whereas SI (β = 0.390) and SME (β = 0.323) are the strongest predictors, followed by perceived behavioral control and sustainable fashion attitude. These findings indicate that SN provides little additional explanatory value in the present model and sample, while identity and digital engagement contribute substantially to sustainable fashion purchase intention. This study refines the TPB by distinguishing traditional normative influence from identity-based and digital-engagement mechanisms among Chinese Gen Z consumers.

Keywords: Sustainable fashion, Theory of planned behaviour, Subjective norm, Sustainable identity, Social media engagement, Environmental value, Environmental knowledge

Introduction

The fashion industry's use of resources, textile waste, and emissions impacts society and the environment (Biyada & Urbonavičius, 2025; Naqvi et al., 2024). By 2030, textile consumption could hit 102 million tonnes, doubling the waste. Recycling faces challenges from fiber blends and non-fibre parts, such as buttons (Das et al., 2025). Approximately 70% of clothing is discarded or donated, often burdening developing countries (Lee et al., 2025). Although recycling options are expanding (Brydges, 2021; Gray et al., 2022), their success depends on consumer participation. Understanding social and psychological factors affecting Generation Z is key to boosting sustainable fashion demand (Xia & Li, 2025).

To address this issue, this study extends the TPB (Ajzen, 1991) by incorporating sustainable identity (SI) and social media engagement (SME) as distinct mechanisms in the model. SI reflects the extent to which sustainable consumption is part of an individual's self-concept (Sparks & Shepherd, 1992), whereas SME captures active engagement with sustainability-related content in digital environments (Hollebeek et al., 2014). These constructs are conceptually distinct from SN, which represents perceived social pressure from others. Environmental value (EV) and environmental knowledge (EK) are incorporated as distal antecedents

that may shape these intermediate mechanisms (Stern, 2000).

Generation Z consumers are particularly relevant to this question because sustainability, identity, and digital interaction are increasingly intertwined in their consumption practices (Halibas et al., 2025). They favor companies that reflect their values and are willing to pay a premium for environmentally friendly products. Sustainability influences brand assessments and purchasing decisions. Gurova (2024) found that Generation Z's clothing habits were influenced more by routines, meanings, and skills than by norms, challenging norm-based sustainability explanations. Studies have revealed attitude–norm dissonance, where positive environmental views do not lead to normative pressure (Gabler & Butler, 2017; Kumar, 2024). Social media provides an additional source of social influence through peer validation, which mediates the effect of exposure to sustainability content on Gen Z's adoption of responsible fashion behaviors (Del Olmo Arriaga et al., 2025). These insights suggest that traditional social influence models may require reconsideration in the context of younger, digitally connected consumers. These extensions also recognize that sustainable consumption may be shaped by self-concept and social engagement beyond cohort effects (Lee & Kim, 2024), while digital environments provide additional contexts in which sustainability-related behaviors are observed and reinforced (Bandura & Walters, 1977).

Accordingly, this study develops and tests an extended TPB model of sustainable fashion purchase intention among Chinese Generation Z consumers. It examines how EV and EK relate to SFA, SN, PBC, SI, and SME, and assesses the extent to which these constructs explain behavioral intention. Nested model comparisons were used to examine whether retaining the SN provided additional explanatory value when identity- and digital-engagement mechanisms were included. This study clarifies the distinct roles of traditional normative pressure, sustainable identity, and social media engagement within the extended TPB framework.

Literature review and hypothesis development

Theoretical background

The Theory of Planned Behavior (Ajzen, 1991) suggests that behavioral intention arises from attitude, subjective norm, and perceived control (Rashina & Muhammed Basheer, 2026; Suneja & Aastha, 2025), which is widely used in pro-environmental and ethical consumption, such as green purchasing, organic food, and sustainable fashion (Dickson & Littrell, 1997). Its strength is in its simplicity and clear link from belief to intention, accommodating additional factors. However, it has two limitations. First, it does not explain what shapes beliefs—attitude, norm, and control are viewed as predictors, but their deeper roots in values and knowledge are unaddressed (Stern, 2000). Second, subjective norm—the perceived social pressure—has shown weak predictive power, especially for private or diffuse behaviors (Armitage & Conner, 2001). Recent research, such as that of La Barbera and Ajzen (2020) and (Liu & Liu, 2024), shows no significant link between social norms and behavioral intention. Studies suggest distinguishing between injunctive and descriptive norms to clarify their different effects (Sawaneh et al., 2024). The inconsistent performance of subjective norms suggests that its predictive relevance may vary across contexts and may also depend on how normative influence is measured and conceptualized. This is relevant for younger consumers, whose social cues now come from online communities rather than face-to-face groups (Bandura & Walters, 1977).

Environmental value, environmental knowledge, and the TPB belief structure

Environmental value (EV) is an individual's enduring belief in protecting nature, while environmental knowledge (EK) is their factual understanding of environmental issues (Stern, 2000). Both shape more specific beliefs about pro-environmental behavior (Schwartz, 1977; Stern, 2000). People with strong EV tend to view sustainable fashion positively (attitude), feel social pressure to participate (subjective norm), believe they can (perceived behavioral control), see it as part of their identity, and engage with sustainability content on social media. Similarly, those with greater environmental knowledge understand the impact of fashion consumption—documented in the circular economy (Brydges, 2021) and low-impact business model research (Gray et al., 2022)—and are more likely to hold favorable beliefs in all five areas. We hypothesize:

H1a-e: Environmental value (EV) positively influences (a) sustainable fashion attitude, (b) subjective norm, (c) perceived behavioral control, (d) sustainable identity, and (e) social media engagement.

H2a-e: Environmental knowledge (EK) positively influences (a) sustainable fashion attitude, (b) subjective norm, (c) perceived behavioral control, (d) sustainable identity, and (e) social media engagement.

Sustainable fashion attitude, subjective norm, and perceived behavioral control → Behavioral intention

Sustainable fashion attitude (SFA) reflects an individual's overall favorable or unfavorable evaluation of purchasing sustainably produced clothing. Within the TPB, attitude is consistently identified as one of the strongest predictors of behavioral intention, as favorable evaluations of a behavior directly increase the motivation to perform it (Ajzen, 1991; Dickson & Littrell, 1997). Consumers who view sustainable fashion as beneficial—environmentally, socially, or personally—are therefore expected to report stronger intentions to purchase it.

H3: Sustainable fashion attitude (SFA) positively influences the behavioral intention (BI) to purchase sustainable clothing.

Subjective norm (SN) captures the perceived social pressure from important referents (family, friends, peers) to perform or refrain from a behaviour. While SN has traditionally been treated as a core TPB predictor, meta-analytic evidence across product categories has repeatedly shown SN to be the weakest and most inconsistent of the three TPB constructs, particularly for behaviours that are privately enacted, low in social visibility, or where normative referents are diffuse rather than concentrated (Armitage & Conner, 2001; Koos, 2011). Following standard TPB theorizing, we nonetheless hypothesize a positive relationship, consistent with the theory's original formulation, and treat this hypothesis as the central test of whether conventional normative pressure retains explanatory relevance in this context:

H4: Subjective norm (SN) positively influences the behavioral intention (BI) to purchase sustainable clothing.

Perceived behavioral control (PBC) reflects an individual's perceived ease or difficulty in performing a behavior, encompassing both internal factors (skills, confidence) and external factors (price, availability of sustainable fashion products). Consumers who perceive fewer financial, logistical, or informational barriers to purchasing sustainable clothing are expected to report stronger purchase intentions (Thøgersen, 2006). Such barriers are well documented on the supply side as well: alternative circular business models such as resale and rental often struggle with scalability, quality perception, and consumer trust (Gray et al., 2022), which may correspondingly shape consumers' perceived control over sustainable purchasing.

H5: Perceived behavioral control (PBC) positively influences the behavioral intention (BI) to purchase sustainable clothing.

Sustainable identity → Behavioral intention

SI reflects the extent to which an individual incorporates environmentally and socially responsible consumption into their self-concept, such that "being a sustainable consumer" becomes part of their self-definition (Sparks & Shepherd, 1992). In this study, SI is treated primarily as a self-identity mechanism within the extended TPB rather than as perceived social influence. When sustainable consumption becomes part of an individual's self-identity, behavioral intention may be strengthened by the desire to maintain consistency between behavior and self-concept. Thus, SI differs from the subjective norm (SN), which reflects perceived social pressure or expectations from important others.

Research shows that consumers, especially younger ones, who view themselves as environmentally or ethically conscious tend to choose clothing that reflects this self-image (Stern, 2000). Fashion choices can also serve as a means of self-expression and identity signaling (Tajfel, 1979). This aligns with evidence that Gen Z's engagement with sustainability can be driven by personal meaning rather than by external obligations (Gurova, 2024). Accordingly, SI represents an internal identity-based pathway through which a sustainable self-concept may shape purchase intentions.

H6: Sustainable identity (SI) positively influences behavioral intention (BI) to purchase sustainable clothing.

Social media engagement → Behavioral intention

Social media engagement (SME) reflects the extent to which individuals actively follow, interact with, and participate in sustainability-related content on digital platforms, including sharing, commenting, and discussing ethical consumption. In this study, SME is treated as a digital-engagement mechanism rather than self-identity or subjective norms. Unlike SN, which captures perceived normative pressure from important others, SME captures active participation and interaction within broader digital networks involving peers, influencers, brands, and online communities (Masur et al., 2023).

Social media provides an environment in which sustainability-related behaviors and information are observed, shared, discussed, and reinforced. Such engagement can increase exposure to sustainability information and provide opportunities for consumers to interact with others regarding sustainable consumption. Therefore, SME represents a distinct digital pathway through which online participation may strengthen sustainable clothing purchase intention.

H7: Social media engagement (SME) positively influences the behavioral intention (BI) to purchase sustainable clothing.

Conceptual framework

This study proposes an extended theory of planned behavior comprising three levels of constructs (Figure 1). At the distal level, environmental value (EV) and environmental knowledge (EK) influence five intermediate constructs (H1a–e, H2a–e): sustainable fashion attitude (SFA), subjective norm (SN), perceived behavioral control (PBC), sustainable identity (SI), and social media engagement (SME). These constructs represent distinct mechanisms. SFA and PBC reflect the evaluative and control components of TPB, while SN captures perceived normative social pressure, SI reflects the integration of sustainable consumption into an individual's self-concept, and SME captures active engagement with sustainability-related content in digital environments. All five constructs predict behavioral intention (BI) to purchase sustainable clothing (H3–H7). Thus, the framework integrates traditional TPB mechanisms with distinct identity-based and digital-engagement mechanisms, allowing their relative roles in explaining sustainable fashion purchase intention to be empirically examined.

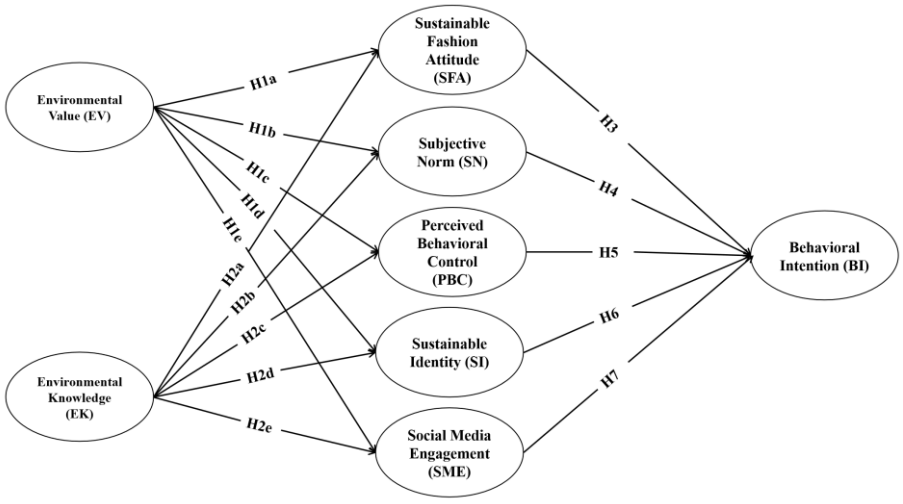

Figure 1 Conceptual model diagram: EV and EK as distal antecedents pointing to SFA, SN, PBC, SI, and SME; all five intermediate constructs pointing to BI

Conceptual framework

This study proposes an extended theory of planned behavior comprising three levels of constructs (Figure 1). At the distal level, environmental value (EV) and environmental knowledge (EK) influence five intermediate constructs (H1a–e, H2a–e): sustainable

fashion attitude (SFA), subjective norm (SN), perceived behavioral control (PBC), sustainable identity (SI), and social media engagement (SME). These constructs represent distinct mechanisms. SFA and PBC reflect the evaluative and control components of TPB, while SN captures perceived normative social pressure, SI reflects the integration of sustainable consumption into an individual's self-concept, and SME captures active engagement with sustainability-related content in digital environments. All five constructs predict behavioral intention (BI) to purchase sustainable clothing (H3–H7). Thus, the framework integrates traditional TPB mechanisms with distinct identity-based and digital-engagement mechanisms, allowing their relative roles in explaining sustainable fashion purchase intention to be empirically examined.

Methodology

Research design and sampling

This study used a cross-sectional survey to test the extended TPB model among Chinese Gen Z consumers aged 18–29 who had purchased sustainable fashion. The sample included university students and recent graduates, all of legal age and able to consent. A non-probability convenience sample was used due to sampling frame challenges. To assess sample size adequacy for PLS-SEM, Soper (2024) calculator was employed, based on an effect size of 0.20, power of 0.80, and significance of 0.05, with eight latent and 24 observed variables. It suggested a minimum of 92 participants, with at least 376 recommended for reliable effect detection. Given the lack of a sampling frame, Yamane (1967) formula for an infinite population was also used. A final sample of 400 respondents was collected, exceeding both the minimum (92) and recommended sizes (376) and meeting Yamane's guidelines.

Measurement

All constructs were measured using multi-item reflective scales from prior research, with minor wording adjustments for the context of sustainable fashion. Environmental value (EV) and knowledge (EK) were adapted from established environmental psychology scales (De Groot & Steg, 2007; Stern et al., 1999; Wiseman & Bogner, 2003); sustainable fashion attitude (SFA), subjective norm (SN), and perceived behavioral control (PBC) followed the TPB tradition (Ajzen, 1991), adapted for fashion (Han & Kim, 2010; Kim & Damhorst, 1998; Paul et al., 2016; Zhang et al., 2021); sustainable identity (SI) and social media engagement (SME) were adapted from Van der Werff, et al. (2013) and Hollebeek et al. (2014); and behavioral intention (BI) followed standard TPB items (Ajzen, 1991; Joshi & Rahman, 2015). All items were rated on a 5-point Likert scale. The questionnaire was developed in English, translated into Chinese via back-translation (Brislin, 1970), and pilot-tested with 30 respondents for clarity and validity.

Data collection procedure

Data were collected via an online questionnaire through Wenjuanxing between April and May 2026. Respondents were informed of the study's purpose, assured of anonymity, and provided consent. A screening question ensured that only those who had purchased sustainable fashion participated. A total of 453 responses were collected, with 400 retained after removing incomplete responses and those failing attention checks.

Data analysis technique

Partial least squares structural equation modelling (PLS-SEM) was used to test the model using SmartPLS 4 (Ringle, 2024). PLS-SEM was chosen over covariance-based SEM (CB-SEM) for three reasons aligned with J. F. Hair, Risher, Sarstedt, and Ringle (2019): (1) the study is primarily predictive and exploratory—extending established theory (TPB)—not confirmatory; (2) the model is complex, involving multiple antecedents and many paths, suited for PLS-SEM; (3) PLS-SEM does not need multivariate normality and handles non-normal Likert data well. Evaluation followed three stages with threshold criteria per Hair, et al. (2022); (Hair et al., 2019).

Model fit was assessed using SRMR, d_ULS, and d_G (Henseler et al., 2016). SRMR values below 0.10 (or 0.08) were considered indicative of acceptable approximate fit. In addition, the observed SRMR, d_ULS, and d_G values were compared with their corresponding 99th-percentile bootstrap (HI99) values, with observed values below HI99 indicating that the bootstrap-based exact-fit criterion was met.

Measurement model evaluation. The measurement model was assessed for internal consistency reliability, convergent validity, and discriminant validity (Hair et al., 2022). Internal consistency reliability was assessed using Cronbach's alpha and composite reliability (rho_c), with values above 0.70 deemed acceptable and above 0.60 acceptable for exploratory research (Hair et al., 2019). Convergent validity was evaluated via Average Variance Extracted (AVE), with ≥0.50 indicating the construct explains at least half of the variance in its indicators. Indicator reliability was checked through outer loadings, with ≥0.70 acceptable and below 0.40 candidates for removal (Hair et al., 2022). Discriminant validity was assessed using the HTMT ratio, with values below 0.85 representing a conservative criterion and values below 0.90 representing a more liberal criterion (Henseler et al., 2015). Multicollinearity was assessed using the variance inflation factor (VIF), with values below 5 indicating no problematic collinearity (Kock, 2015).

Structural model evaluation. After confirming the measurement model, the structural model was assessed based on path coefficients and significance via bootstrapping (5,000 subsamples, $\alpha = 0.05$). R^2 measured explanatory power, with 0.25, 0.50, and 0.75 indicating weak, moderate, and substantial effects, respectively.

This study used nested model comparisons to assess the role of subjective norms (SN). Four model specifications were estimated: Models 1 and 2 represented the baseline TPB structure with and without SN, respectively, whereas Models 3 and 4 represented the extended structure incorporating SI and SME with and without SN, respectively. Therefore, the valid comparisons were Model 1 versus Model 2 and Model 3 versus Model 4. The models were compared using SRMR, d_ULS, d_G, HTMT, path coefficients and their significance, VIF, and R^2 to assess the consequences of excluding SN.

Results

Demographic data

The final sample consisted of 400 respondents in total. Females accounted for 52.0% of the sample, while males accounted for 48.0%. Most respondents were aged 18-25 years (71.0%) and held a bachelor's or associate's degree (62.0%). Regarding purchasing frequency, 41.0% purchased clothing 1-2 times per month, and 40.0% purchased clothing 3–4 times per month. In terms of location, 60.8% lived in Tier 1 cities and 39.3% lived in second-tier cities. Overall, the sample represented young, educated Chinese consumers with relatively frequent clothing purchases.

Model fit

Four models were estimated in this study. Models 1 and 2 tested the baseline Extended TPB (EV, EK → SFA, SN, PBC → BI) with and without SN. Models 3 and 4 tested the same structure extended with SI and SME (EV, EK → SFA, SN, PBC, SI, SME → BI), with and without SN. Because Models 1 and 2 and Models 3 and 4 differ in construct composition, valid comparisons are 1 vs. 2 and 3 vs. 4 only.

Table 1 reports SRMR, dULS, and dG at the saturated and estimated levels, tested against their HI99 bootstrap thresholds (fit is acceptable when Value < HI99). Model 1 (with SN) exceeded all HI99 thresholds (SRMRE = 0.099 vs. 0.047; dULSE = 1.664 vs. 0.374). Removing SN in Model 2 sharply reduced all discrepancies (SRMRE = 0.067; dULSE = 0.540; dGE = 0.297), although values still exceeded HI99. The same pattern held for Model 3 vs. Model 4: Model 3 showed the poorest fit overall (dULSE = 2.439), while Model 4 improved substantially across all indices (SRMRE = 0.075; dULSE = 1.310; dGE = 0.639).

Removing the SN consistently reduced the discrepancy measures in both the baseline and extended models, indicating an improved relative model fit. However, Models 2 and 4 still exceeded the corresponding HI99 thresholds and therefore did not meet the bootstrap-based exact fit criterion. Thus, the results indicate a relative improvement in the model fit rather than an acceptable exact fit.

Measurement model

Table 2 presents internal consistency reliability and convergent validity across four models. All indicator loadings exceeded 0.708, with most ranging from 0.885–0.958. SN ranged from 0.743–0.941 (Model 1) and 0.744–0.933 (Model 3). AVE values exceeded 0.50 (0.770–0.892), confirming convergent validity. Composite reliability (rho_c) was 0.908–0.961, and

Cronbach's alpha was 0.845–0.939, both above 0.70, indicating strong internal consistency. Reliability and validity estimates for constructs (BI, EK, EV, PBC, SFA, SI, SME) remained stable across Models 1– 4, indicating that removing SN did not affect other measures. These results confirm that the measurement model was sound in all four models, allowing progression to structural analysis.

Table 1 Model fit

Parameters	Model1(with SN)				Model2 (no SN)			
	Value^S	**H99^S**	**Value^E**	**H99^E**	**Value^S**	**H99^S**	**Value^E**	**H99^E**
SRMR	0.054	0.040	0.099	0.047	0.039	0.032	0.067	0.044
d_{ULS}	0.500	0.272	1.664	0.374	0.184	0.124	0.540	0.237
d_G	0.371	0.296	0.620	0.299	0.249	0.231	0.297	0.245
Parameters	**Model3 (with SN)**				**Model4 (no SN)**			
	Value^S	**H99^S**	**Value^E**	**H99^E**	**Value^S**	**H99^S**	**Value^E**	**H99^E**
SRMR	0.048	0.036	0.090	0.044	0.038	0.029	0.075	0.041
d_{ULS}	0.704	0.383	2.439	0.578	0.341	0.192	1.310	0.388
d_G	0.585	0.446	0.986	0.451	0.444	0.369	0.639	0.373

Note: XXX^S is the number in the Saturate model, and XXXE is the number in the Estimate model

Table 2 Measurement model

Variable	Loading	AVE	rho_c	rho_a	alpha
Model1					
BI	0.936-0.944	0.885	0.959	0.936	0.935
EK	0.910-0.938	0.855	0.946	0.918	0.915
EV	0.885-0.945	0.830	0.936	0.902	0.897
PBC	0.902-0.926	0.842	0.941	0.907	0.906
SFA	0.931-0.958	0.890	0.960	0.941	0.938
SN	0.743-0.941	0.770	0.908	0.870	0.845
Model2					
BI	0.936-0.944	0.885	0.959	0.936	0.935
EK	0.910-0.938	0.855	0.946	0.918	0.915
EV	0.885-0.945	0.830	0.936	0.902	0.897
PBC	0.902-0.926	0.842	0.941	0.907	0.906
SFA	0.931-0.958	0.890	0.960	0.941	0.938
Model3					
BI	0.936-0.944	0.886	0.959	0.936	0.935
EK	0.911-0.940	0.855	0.946	0.916	0.915
EV	0.886-0.946	0.830	0.936	0.903	0.897
PBC	0.902-0.926	0.842	0.941	0.907	0.906
SFA	0.930-0.958	0.890	0.960	0.941	0.938
SI	0.934-0.949	0.883	0.957	0.936	0.933
SME	0.928-0.954	0.892	0.961	0.940	0.939
SN	0.744-0.933	0.770	0.908	0.870	0.845
Model4					
BI	0.936-0.944	0.886	0.959	0.936	0.935
EK	0.912-0.940	0.855	0.946	0.917	0.915
EV	0.885-0.946	0.830	0.936	0.904	0.897
PBC	0.902-0.926	0.842	0.941	0.907	0.906
SFA	0.930-0.958	0.890	0.960	0.941	0.938

Variable	Loading	AVE	rho_c	rho_a	alpha
SI	0.934-0.949	0.883	0.957	0.936	0.933
SME	0.928-0.954	0.892	0.961	0.940	0.939

Discriminant validity (HTMT)

Table 3 presents the HTMT ratios across the four models. Most construct pairs were below the liberal threshold of 0. 90, indicating adequate discriminant validity. However, SN–SFA exceeded 0.90 in Models 1 (0.926) and 3 (0.925), indicating a discriminant validity concern between these constructs. In the extended models, SME– SI also exceeded the 0. 90 threshold (0. 914 in both Models 3 and 4), indicating that this discriminant validity concern remained regardless of whether SN was included. When SN was removed in Models 2 and 4, the SN- related HTMT comparisons were no longer applicable because SN was not included in these models. Overall, the results indicate that removing SN eliminates the need to evaluate SN-related construct pairs but does not resolve the SME– SI discriminant validity concern.

Table 3 Discriminant validity (HTMT)

Pair of latent	Model1	Model2	Model3	Model4
EK <-> BI	0.824	0.824	0.803	0.803
EV <-> BI	0.520	0.520	0.487	0.487
EV <-> EK	0.514	0.514	0.490	0.490
PBC <-> BI	0.764	0.764	0.735	0.735
PBC <-> EK	0.891	0.891	0.875	0.875
PBC <-> EV	0.531	0.531	0.505	0.505
SFA <-> BI	0.628	0.628	0.592	0.592
SFA <-> EK	0.573	0.573	0.535	0.535
SFA <-> EV	0.794	0.794	0.783	0.783
SFA <-> PBC	0.665	0.665	0.636	0.636
SI <-> BI	-	-	0.876	0.876
SI <-> EK	-	-	0.743	0.743
SI <-> EV	-	-	0.505	0.505
SI <-> PBC	-	-	0.643	0.643
SI <-> SFA	-	-	0.535	0.535
SME <-> BI	-	-	0.888	0.888
SME <-> EK	-	-	0.843	0.843
SME <-> EV	-	-	0.472	0.472
SME <-> PBC	-	-	0.756	0.756
SME <-> SFA	-	-	0.551	0.551
SME <-> SI	-	-	0.914	0.914
SN <-> BI	0.730	-	0.729	-
SN <-> EK	0.763	-	0.763	-
SN <-> EV	0.745	-	0.745	-
SN <-> PBC	0.890	-	0.889	-
SN <-> SFA	0.926	-	0.925	-
SN <-> SI	-	-	0.674	-
SN <-> SME	-	-	0.705	-

Structural model — Model 1

Figure 2 and Table 4 present the structural results for Model 1. EK and EV significantly predicted all three intermediate constructs: EK→PBC ($\beta = 0.756$, $p < .001$), EK→SN ($\beta = 0.456$, $p < .001$), EK→SFA ($\beta = 0.245$, $p < .001$); EV→SFA ($\beta = 0.616$, $p < .001$), EV→SN ($\beta = 0.450$, $p < .001$), EV→PBC ($\beta = 0.125$, $p = .010$). R^2 values were 0.582 (SFA), 0.601 (SN), and 0.673 (PBC). At the BI level ($R^2 = 0.535$), PBC was the strongest predictor ($\beta = 0.527$, $p < .001$), followed by SFA ($\beta = 0.214$, $p = .010$). The SN→BI path was non-significant ($\beta = 0.062$, $p = .428$; CI [-0.087, 0.216], spanning zero). This null SN→BI path, together with the elevated VIF, further justifies examining the trimmed model (Model 2).

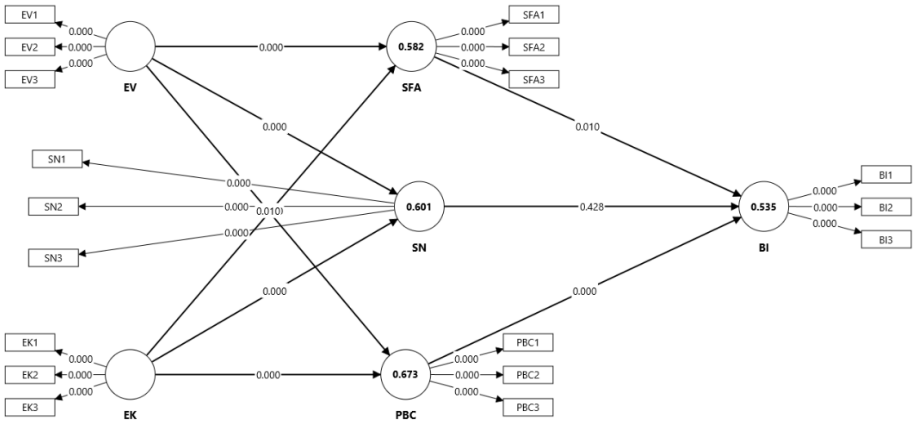

Figure 2 Results of Model 1: P-values of path coefficients and loadings

Table 4 Structural model of Model 1

Path	Path Coefficient	SD	T statistics	Confidence intervals		R^2	VIF	P values
				2.5%	97.5%			
EK -> PBC	0.756	0.040	18.852	0.671	0.827	0.673	1.277	0.000
EK -> SFA	0.245	0.044	5.568	0.164	0.333	0.582	1.277	0.000
EK -> SN	0.456	0.044	10.252	0.371	0.545	0.601	1.277	0.000
EV -> PBC	0.125	0.049	2.562	0.038	0.229	0.673	1.277	0.010
EV -> SFA	0.616	0.048	12.823	0.518	0.705	0.582	1.277	0.000
EV -> SN	0.450	0.051	8.891	0.347	0.545	0.601	1.277	0.000
PBC -> BI	0.527	0.068	7.694	0.387	0.659	0.535	2.512	0.000
SFA -> BI	0.214	0.083	2.563	0.047	0.374	0.535	3.441	0.010
SN -> BI	0.062	0.078	0.792	-0.087	0.216	0.535	5.346	0.428

Structural Model — Model 2

Figure 3 and Table 5 present the structural results for Model 2 (with SN removed). EK and EV again significantly predicted SFA and PBC: EK→PBC ($\beta = 0.756$, $p < .001$), EK→SFA ($\beta = 0.245$, $p < .001$), EV→PBC ($\beta = 0.125$, $p = .010$), and EV→SFA ($\beta = 0.617$, $p < .001$). R^2 values remained similar to Model 1: 0.583 for SFA and 0.673 for PBC. Inner VIF values ranged from 1.276 to 1.597, indicating no problematic multicollinearity in Model 2. At the BI level ($R^2 = 0.534$, almost identical to Model 1's 0.535), both predictors remained significant: PBC→BI ($\beta = 0.552$, $p < .001$) and SFA→BI ($\beta = 0.250$, $p < .001$). Compared with Model 1, both paths were somewhat stronger and estimated more precisely. Thus, removing the non-significant SN path did not reduce the model's explanatory power and also eliminated the elevated collinearity observed for SN in Model 1, supporting Model 2 as a more parsimonious specification.

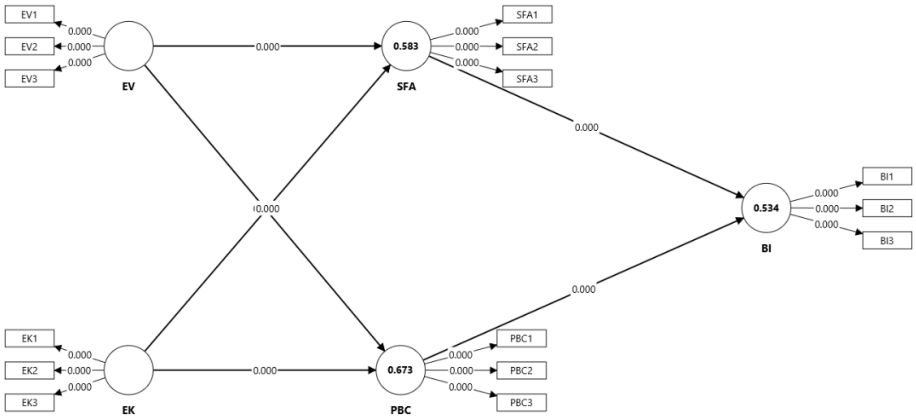

Figure 3 Results of Model 2: P-values of path coefficients and loadings

Table 5 Structural model of Model 2

Path	Path Coefficient	SD	T statistics	Confidence intervals		R^2	VIF	P values
				2.5%	97.5%			
EK -> PBC	0.756	0.040	18.842	0.671	0.827	0.673	1.276	0.000
EK -> SFA	0.245	0.044	5.567	0.164	0.333	0.583	1.276	0.000
EV -> PBC	0.125	0.049	2.561	0.038	0.229	0.673	1.276	0.010
EV -> SFA	0.617	0.048	12.864	0.519	0.705	0.583	1.276	0.000
PBC -> BI	0.552	0.060	9.175	0.433	0.670	0.534	1.597	0.000
SFA -> BI	0.250	0.067	3.723	0.119	0.377	0.534	1.597	0.000

Structural Model — Model 3

Figure 4 and Table 6 present the structural results for Model 3, the full extended model including SI and SME with SN retained. EK and EV significantly predicted the intermediate constructs, except for EV→SME, which was not supported because its 95% confidence interval included zero (β = 0.092, 95% CI [-0.003, 0.176]). The R^2 values for these constructs ranged from 0.541 (SI) to 0.672 (PBC). Inner VIF values ranged from 1.276 to 5.397. All values were below 5, except for SN→ BI (VIF = 5.397) , indicating potential collinearity involving SN in the prediction of BI. At the BI level (R^2 = 0.776), SI (β = 0.390, p < .001) and SME (β = 0.325, p < .001) showed the strongest significant effects, followed by PBC (β = 0.181, p = .002) and SFA (β = 0.124, p = .019). In contrast, SN→BI was not significant (β = -0.031, p = .605; 95% CI [-0.148, 0.095]). Thus, SN showed both a non-significant effect and elevated collinearity in the full extended model, providing additional justification for examining the trimmed Model 4.

Structural Model — Model 4

Figure 5 and Table 7 present the results for Model 4, the extended model including SI and SME but excluding SN. EK and EV predicted the four intermediate constructs, except for EV→SME, which was not supported because its 95% confidence interval included zero (β = 0.092, 95% CI [-0.002, 0.176]). R^2 values ranged from 0.541 (SI) to 0.672 (PBC), while the R^2 for BI remained 0.776, unchanged from Model 3. Inner VIF values ranged from 1.276 to 4.482, with all values below 5, indicating no problematic multicollinearity in Model 4. SI (β = 0.390, p < .001) and SME (β = 0.323, p < .001) showed the strongest significant effects on BI, followed by PBC (β = 0.169, p = .003) and SFA (β = 0.106, p = .009). Compared with Model 3, removing SN maintained the same explanatory power while eliminating the elevated VIF associated with SN, supporting Model 4 as a more parsimonious specification.

Table 6 Structural model of Model 3

Path	Path Coefficient	SD	T statistics	Confidence intervals		P values	VIF	Hypothesis
				2.5%	97.5%			
EK -> PBC	0.755	0.040	18.637	0.669	0.827	0.000	1.276	Supported
EK -> SFA	0.245	0.044	5.551	0.163	0.333	0.000	1.276	Supported
EK -> SI	0.616	0.041	15.164	0.531	0.693	0.000	1.276	Supported
EK -> SME	0.739	0.033	22.106	0.669	0.802	0.000	1.276	Supported
EK -> SN	0.454	0.045	10.173	0.369	0.544	0.000	1.276	Supported
EV -> PBC	0.126	0.049	2.568	0.038	0.230	0.010	1.276	Supported
EV -> SFA	0.617	0.048	12.802	0.518	0.705	0.000	1.276	Supported
EV -> SI	0.206	0.054	3.801	0.099	0.311	0.000	1.276	Supported
EV -> SME	0.092	0.046	1.972	-0.003	0.176	0.049	1.276	Not Supported
EV -> SN	0.451	0.051	8.892	0.348	0.546	0.000	1.276	Supported
PBC -> BI	0.181	0.058	3.081	0.069	0.291	0.002	3.113	Supported
SFA -> BI	0.124	0.052	2.340	0.022	0.226	0.019	3.527	Supported
SI -> BI	0.390	0.063	6.156	0.267	0.517	0.000	3.952	Supported
SME -> BI	0.325	0.070	4.758	0.183	0.456	0.000	4.507	Supported
SN -> BI	**-0.031**	**0.062**	**0.517**	**-0.148**	**0.095**	**0.605**	5.397	Not Supported

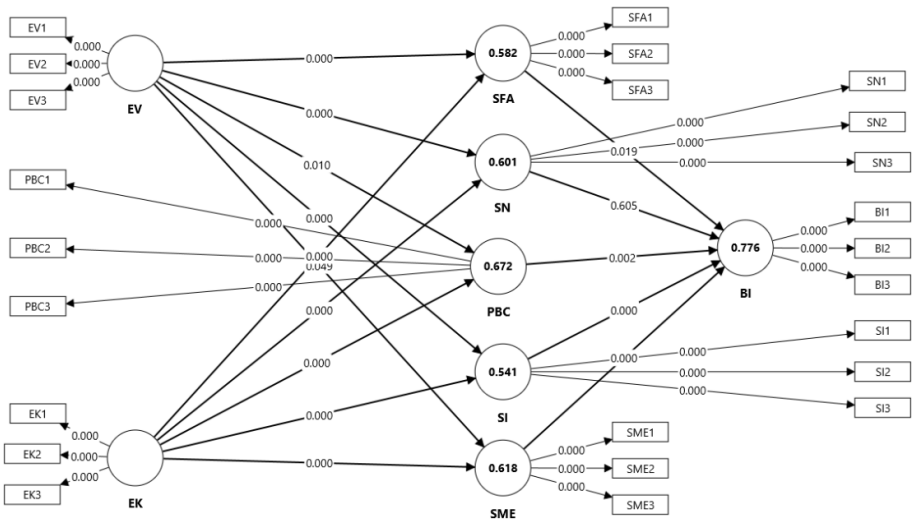

Figure 4 Results of Model 3: p-values of path coefficients and loadings

Table 7 Structural model of Model 4

Path	Path Coefficient	SD	*t* statistics	Confidence intervals		P values	VIF	Hypothesis
				2.5%	97.5%			
EK -> PBC	0.754	0.041	18.584	0.668	0.827	0.000	1.276	Supported
EK -> SFA	0.245	0.044	5.546	0.163	0.332	0.000	1.276	Supported
EK -> SI	0.616	0.041	15.161	0.531	0.693	0.000	1.276	Supported
EK -> SME	0.739	0.033	22.093	0.669	0.802	0.000	1.276	Supported
EV -> PBC	0.126	0.049	2.568	0.038	0.231	0.010	1.276	Supported
EV -> SFA	0.617	0.048	12.816	0.518	0.706	0.000	1.276	Supported
EV -> SI	0.206	0.054	3.801	0.099	0.312	0.000	1.276	Supported

Path	Path Coefficient	SD	*t* statistics	Confidence intervals		P values	VIF	Hypothesis
				2.5%	97.5%			
EV -> SME	0.092	0.046	1.976	-0.002	0.176	0.048	1.276	Not Supported
PBC -> BI	0.169	0.056	2.941	0.062	0.281	0.003	2.342	Supported
SFA -> BI	0.106	0.040	2.631	0.031	0.187	0.009	1.710	Supported
SI -> BI	0.390	0.064	6.146	0.266	0.517	0.000	3.952	Supported
SME -> BI	0.323	0.069	4.765	0.180	0.451	0.000	4.482	Supported

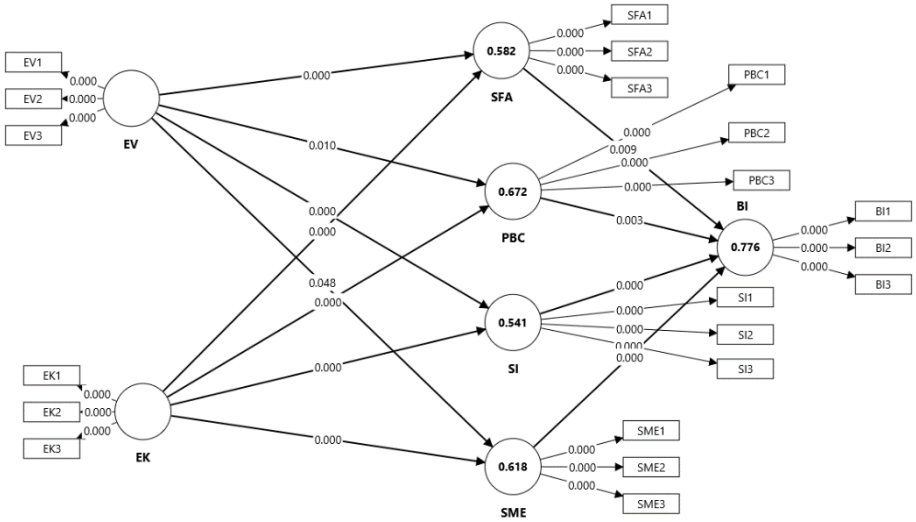

Figure 5 Results of Model 4: p-values of path coefficients and loadings

Discussion

Key findings and implications

The findings support a parsimonious extension of the Theory of Planned Behavior (TPB) to explain sustainable fashion purchase intention among Chinese Generation Z consumers. The trimmed model explained 77.6% of the variance in behavioral intention (R2 = 0.776), which was equal to that of the full model. Subjective norm (SN) had no significant effect on behavioral intention, and its removal did not reduce the model's explanatory power. This result is consistent with previous evidence that SN is generally a weaker and less stable predictor of intention than attitude and perceived behavioral control (Armitage & Conner, 2001; Sawaneh et al., 2024).

SI was the strongest predictor of behavioral intention ($\beta = 0.390$, $p<.001$), followed by social media engagement (SME; $\beta = 0.323$, $p<.001$). Both exerted stronger effects than perceived behavioral control (PBC; $\beta = 0.169$, $p = .003$) and sustainable fashion attitude (SFA; $\beta = 0.106$, $p = .009$). The importance of SI supports identity-based explanations that consumers are more likely to perform sustainable behaviors when those behaviors are consistent with their self-concept (Sparks & Shepherd, 1992; Van der Werff et al., 2013). It also reflects the role of fashion consumption in communicating personal meaning and identity (Gurova, 2024). Meanwhile, the effect of SME indicates that active cognitive, emotional, and behavioral participation in social media may be more influential than passive exposure to social approval (Hollebeek et al., 2014).

Environmental knowledge (EK) emerged as the principal upstream antecedent, particularly in shaping PBC, SME, and SI, whereas environmental values (EV) primarily influenced SFA. Therefore, knowledge and values perform complementary theoretical roles. EK strengthens consumers' perceived capability, sustainability-related identity, and digital engagement, whereas EV provides an evaluative foundation for favorable attitudes toward EVs. This pattern is consistent with environmental behavior frameworks that distinguish broad environmental orientations from the more proximal mechanisms through which behavioral decisions are made (Stern, 2000).

The model comparison supports the trimmed specification. Removing SN lowered the estimated-

model SRMR from 0.090 to 0.075 while maintaining the same R^2 (0.776), indicating improved relative fit without reducing explanatory power. However, the trimmed model still did not meet the bootstrap-based exact-fit criterion. Moreover, although the SN–SFA HTMT comparison is no longer applicable when SN is excluded, the SME–SI discriminant validity concern remains in Model 4. These findings refine rather than reject the TPB. Attitude and PBC remained significant, preserving the core evaluative and control mechanisms (Ajzen, 1991), while SI and SME provided additional identity-based and digital-engagement mechanisms for explaining sustainable fashion purchase intention among Chinese Generation Z consumers. Practically, stakeholders should provide credible environmental knowledge, develop inclusive identity-based communication, promote social media participation, and reduce barriers related to price, accessibility, product information, and availability.

Theoretical implications

This study has three implications for the extended TPB. First, it distinguishes three conceptually different mechanisms: SN represents perceived social pressure (Ajzen, 1991), SI reflects behavior–self-concept consistency (Sparks & Shepherd, 1992; Van der Werff et al., 2013), and SME captures digital engagement (Hollebeek et al., 2014). In the present model and sample, SI and SME showed stronger significant relationships with sustainable fashion purchase intention, whereas SN was not. This finding highlights the additional explanatory roles of identity-based and digital engagement mechanisms, without implying that they replace normative social influence.

Second, environmental knowledge (EK) serves as an upstream factor associated with PBC, SI, SME, and SFA, while environmental value (EV) is particularly strongly associated with SFA. EK contributes to perceived ability, identity, and digital engagement, whereas EV provides an evaluative basis for sustainable fashion attitudes. This extends the TPB by positioning environmental factors as distal antecedents of more proximal mechanisms rather than direct predictors.

Third, the model comparison provides a contextual assessment of the SN's incremental role. Removing SN maintained the same explanatory power (R^2 = 0.776) and reduced the estimated-model SRMR from 0.090 to 0.075, although Model 4 did not meet the bootstrap-based exact-fit criterion. The SN–SFA HTMT comparison was no longer applicable after SN was excluded, whereas the SME–SI discriminant validity concern remained applicable. Thus, the contribution lies not in rejecting the SN universally but in showing that it provides little additional explanatory value in the present model and sample.

Implications for practice

The findings highlight four priorities for sustainable fashion in China's Gen Z. First, use digital platforms to share clear, verifiable environmental information via videos and traceability tools because environmental knowledge predicts PBC, SME, and SI. Second, craft inclusive, identity-driven stories, as SI strongly predicts behavioral intent. Third, social media should facilitate interaction—questions, reviews, challenges—rather than just advertising, since engagement boosts SME, while voluntary participation is preferable. Lastly, reduce barriers to PBC with labels, certifications, accessible prices, and convenient services, as PBC significantly influences intent. Combining education, identity messaging, engagement, and barrier reduction helps convert concern into sustainable buying.

Limitations and directions for future research

This study has some limitations. Its cross-sectional design limits causal inference as all variables are measured at one time, indicating associations rather than causation. Future research should use longitudinal, multi-wave, or experimental designs to better assess causality. Second, the sample consists of Chinese Generation Z consumers aged 18–25, which may restrict how widely the results can be applied. The influence of SI, SME, and SN can differ across various demographic groups, cultures, and regions. Therefore, future research should test the model with different populations and in diverse cultural settings. Third, this study examines behavioral intention rather than actual purchasing behavior. Intentions may not lead to purchases due to barriers such as price, availability, and convenience, reflecting the intention–behavior gap. Future research should include behavioral data, such as purchase records, product choices, or repeat purchases. Fourth, although the overall SN construct was not significant, it

is unclear whether injunctive and descriptive norms have separate effects. Future research should model these independently to determine whether they add explanatory value beyond SI and SME. Finally, aggregate analysis may hide differences among consumer groups. Future research should perform multi-group analysis across gender, income, education, and other traits after confirming measurement invariance. These steps would improve the model's causal, demographic, and cross-cultural validity.

Conclusion

This study uses the theory of planned behavior to analyze sustainable fashion purchase intentions among Chinese Gen Z consumers. The model explained 77.6% of behavioral intentions and remained robust without subjective norms (SN). This shows that a contextually adapted TPB effectively predicts behavior by emphasizing attitudes, perceived control, identity, and digital influences. Environmental knowledge (EK) is a primary upstream factor impacting perceived control, social media engagement, and sustainable identity through multiple pathways, not just attitude. Environmental value significantly influences sustainable fashion attitude, demonstrating that knowledge and values together strengthen purchase intention.

The key finding shows that traditional Subjective Norm (SN) has been replaced by sustainable identity (SI) and social media engagement (SME). While SI and SME predict behavioral intention, SN is insignificant, and its removal does not affect R2. The question—"The Death of Subjective Norm?"—should be approached cautiously. SN may still matter, but its role diminishes in digital contexts. Social influence now mainly occurs through identity and online engagement.

Practitioners should combine digital environmental education, identity-driven brand narratives, social media engagement, and barrier-reduction measures to make environmental knowledge personally relevant, increase purchase confidence, and reinforce sustainable fashion intentions.

Declaration of generative AI in scientific writing

During the preparation of this manuscript, the authors used ChatGPT, Grammarly, and Paperpal solely to improve language and readability. All AI-assisted outputs were reviewed and edited by the authors, who take full responsibility for the final content.

CRediT author statement

Haung Shunping: Investigation, Data curation, Resources, Reference management, Writing – review & editing. **Sakchai Naknok:** Supervision, Validation, Writing – review & editing. **Chanta Jhantasana:** Conceptualization, Methodology, Formal analysis, Validation, Visualization, Writing – original draft, Writing – review & editing, Supervision, Project administration.

References

Ajzen, I. (1991). The theory of planned behavior. *Organizational behavior and human decision processes, 50*(2), 179-211.

Armitage, C. J., & Conner, M. (2001). Efficacy of the theory of planned behaviour: A meta-analytic review. *British journal of social psychology, 40*(4), 471-499.

Bandura, A., & Walters, R. H. (1977). *Social learning theory* (Vol. 1). New Jersey, USA: Prentice-Hall, Englewood Cliffs.

Biyada, S., & Urbonavičius, J. (2025). Circularity in textile waste: challenges and pathways to sustainability. *Cleaner Engineering and Technology, 24*, 100905.

Brislin, R. W. (1970). Back-translation for cross-cultural research. *Journal of cross-cultural psychology, 1*(3), 185-216.

Brydges, T. (2021). Closing the loop on take, make, waste: Investigating circular economy practices in the Swedish fashion industry. *Journal of cleaner production, 293*, 126245.

Das, A. K., Hossain, M. F., Khan, B. U., Rahman, M. M., Asad, M., & Akter, M. (2025). Circular economy: A sustainable model for waste reduction and wealth creation in the textile supply chain. *SPE Polymers, 6*(1), e10171.

De Groot, J. I., & Steg, L. (2007). Value orientations and environmental beliefs in five countries: Validity of an instrument to measure egoistic, altruistic and biospheric value orientations. *Journal of cross-cultural psychology, 38*(3), 318-332.

Del Olmo Arriaga, J. L., Pretel-Jiménez, M., & Ruíz-Viñals, C. (2025). From fast fashion to shared sustainability: The role of digital communication and policy in generation Z's consumption Habits. *Sustainability, 17*(18), 8382.

Dickson, M. A., & Littrell, M. A. (1997). Consumers of clothing from alternative trading organizations: Societal attitudes and purchase evaluative criteria. *Clothing and Textiles Research Journal, 15*(1), 20-33.

Gabler, C. B., & Butler, T. D. (2017). *It's not easy being green: Why Consumer behaviors don't match their attitudes* (pp. 898-898). In Proceedings of the Customer is NOT Always Right? Marketing Orientationsin a Dynamic Business World: Proceedings of the 2011 World Marketing Congress : Melbourne, Australia: Springer.

Gray, S., Druckman, A., Sadhukhan, J., & James, K. (2022). Reducing the environmental impact of clothing: an exploration of the potential of alternative business models. *Sustainability, 14*(10), 6292.

Gurova, O. (2024). Practice theory approach to Gen Z's sustainable clothing consumption in Finland. *Young Consumers, 25*(3), 289-307.

Hair, J. F., Hult, G. T. M., Ringle, C. M., & Sarstedt, M. (2022). *A primer on partial least squares structural equation modeling (PLS-SEM)* (3rd eds.). Thousand Oaks, CA: Sage.

Hair, J. F., Risher, J. J., Sarstedt, M., & Ringle, C. M. (2019). When to use and how to report the results of PLS-SEM. *European business review, 31*(1), 2-24.

Halibas, A., Akram, U., Hoang, A.-P., & Thi Hoang, M. D. (2025). Unveiling the future of responsible, sustainable, and ethical consumption: a bibliometric study on Gen Z and young consumers. *Young Consumers, 26*(7), 142-171.

Han, H., & Kim, Y. (2010). An investigation of green hotel customers' decision formation: Developing an extended model of the theory of planned behavior. *International journal of hospitality management, 29*(4), 659-668.

Henseler, J., Hubona, G., & Ray, P. A. (2016). Using PLS path modeling in new technology research: updated guidelines. *Industrial management & data systems, 116*(1), 2-20.

Henseler, J., Ringle, C. M., & Sarstedt, M. (2015). A new criterion for assessing discriminant validity in variance-based structural equation modeling. *Journal of the academy of marketing science, 43*(1), 115-135.

Hollebeek, L. D., Glynn, M. S., & Brodie, R. J. (2014). Consumer brand engagement in social media: Conceptualization, scale development and validation. *Journal of interactive marketing, 28*(2), 149-165.

Joshi, Y., & Rahman, Z. (2015). Factors affecting green purchase behaviour and future research directions. *International Strategic management review, 3*(1-2), 128-143.

Kim, H.-S., & Damhorst, M. L. (1998). Environmental concern and apparel consumption. Clothing and Textiles Research Journal, 16(3), 126-133.

Kock, N. (2015). Common method bias in PLS-SEM: A full collinearity assessment approach. *International Journal of e-Collaboration, 11*(4), 1-10.

Koos, S. (2011). Varieties of environmental labelling, market structures, and sustainable consumption across Europe: A comparative analysis of organizational and market supply determinants of environmental-labelled goods. *Journal of Consumer Policy, 34*(1), 127-151.

Kumar, R. (2024). To save the environment is my moral duty: investigating young consumer's green purchase behaviour with moderated mediation approach. *Social Responsibility Journal, 20*(8), 1508-1534.

La Barbera, F., & Ajzen, I. (2020). Control interactions in the theory of planned behavior: Rethinking the role of subjective norm. *Europe's Journal of Psychology, 16*(3), 401.

Lee, D. C., & Kim, J. (2024). Feeling younger and acting greener: The impact of subjective age on sustainable consumption. *Psychology & marketing, 41*(10), 2310-2328.

Lee, J., Park, C. H., Yun, C., & Lee, S. (2025). Textile waste management and its sustainability: A review. *Journal of Material Cycles and Waste Management, 27*(4), 2183-2197.

Liu, L., & Liu, J. (2024). Prediction of rear-seat belt use: Application of extended theory of planned behavior. *Traffic injury prevention, 25*(5), 698-704.

Masur, P. K., Bazarova, N. N., & DiFranzo, D. (2023). The impact of what others do, approve of, and expect you to do: An in-depth analysis of social norms and self-disclosure on social media. *Social Media+ Society, 9*(1), 20563051231156401.

Naqvi, S. L. H., Nadeem, M., Ayub, F., Yasar, A., Naqvi, S. H. Z., & Tanveer, R. (2024). *Social and environmental impacts in textile production* (pp. 423-453). In Singh, P. (Ed.). Dye Pollution from Textile Industry: Challenges and Opportunities for Sustainable Development Singapore: Springer Nature. https://doi.org/10.1007/978- 981-97-5341-3_19

Paul, J., Modi, A., & Patel, J. (2016). Predicting green product consumption using theory of planned behavior and reasoned action. *Journal of retailing and consumer services, 29*, 123-134.

Rashina, M., & Muhammed Basheer, M. (2026). Circular Fashion Through Re-Commerce Platforms: A TPB-Based Study on Consumer Intention and the Role of Environmental Concern and Perceived Risk. *Circular Economy and Sustainability, 6*(3), 209.

Ringle, C. M., Wende, S., & Becker, J.-M. (2024). *SmartPLS 4* (Computer software). Retrieved from https://www.smartpls.com

Sawaneh, I. A., Fan, L., & Sesay, B. (2024). Investigating the influence of residents' attitudes, perceptions of risk, and subjective norms on their willingness to engage in flood prevention efforts in Freetown, Sierra Leone. *Nature-Based Solutions, 6*, 100143.

Schwartz, S. H. (1977). *Normative influences on altruism* (pp. 221-279). In Berkowitz, L. (Ed.). Advances in experimental social psychology (Vol. 10). New York, USA: Academic Press.

Soper, D. S. (2024). *A-priori Sample Size Calculator for Structural Equation Models* (Software). Retrieved from https://www.danielsoper.com/statcalc

Sparks, P., & Shepherd, R. (1992). Self-identity and the theory of planned behavior: Assesing the role of identification with "green consumerism". *Social psychology quarterly, 55*(4), 388-399.

Stern, P. C. (2000). New environmental theories: toward a coherent theory of environmentally significant behavior. *Journal of social issues, 56*(3), 407-424.

Stern, P. C., Dietz, T., Abel, T., Guagnano, G. A., & Kalof, L. (1999). A value-belief-norm theory of support for social movements: The case of environmentalism. *Human Ecology Review, 6*(2), 81-97.

Suneja, A., & Aastha. (2025). Sustainable fashion purchase intention: A systematic literature review approach. *SN Business & Economics, 5*(12), 212.

Tajfel, H., & Turner, J. C. (1979). *An integrative theory of intergroup conflict* (pp. 33-37). In Austin, W. G., & Worchel, S. (Eds.). The social psychology of intergroup relations. Monterey, USA: Brooks/Cole.

Thøgersen, J. (2006). Media attention and the market for 'green'consumer products. *Business Strategy and the Environment, 15(*3), 145-156.

Van der Werff, E., Steg, L., & Keizer, K. (2013). The value of environmental self-identity: The relationship between biospheric values, environmental self-identity and environmental preferences, intentions and behaviour. *Journal of Environmental Psychology, 34*, 55-63.

Wiseman, M., & Bogner, F. X. (2003). A higher-order model of ecological values and its relationship to personality. *Personality and Individual Differences, 34*(5), 783-794.

Xia, Z., & Li, Z. (2025). Psychological drivers of sustainable cultural fashion exploring generation Z's behavioral intentions toward circular economy adoption. *Journal of Cultural Analysis and Social Change, 10*(2), 1873-1884.

Yamane, T. (1967). *Statistics: An Introductory analysis*. New York: Harper & Row.

Zhang, B., Zhang, Y., & Zhou, P. (2021). Consumer attitude towards sustainability of fast fashion products in the UK. *Sustainability, 13*(4), 1646.